THIS DOCUMENT IS TRUE AND CORRECT AT TIME OF PUBLICATION. CONTINUED PRODUCT IMPROVEMENTS MAKE SPECIFICATIONS AND MEASUREMENTS SUBJECT TO CHANGE WITHOUT NOTICE.

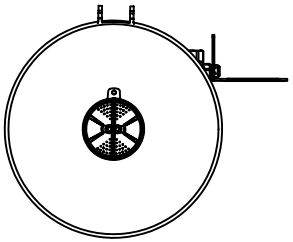

TOP VIEW

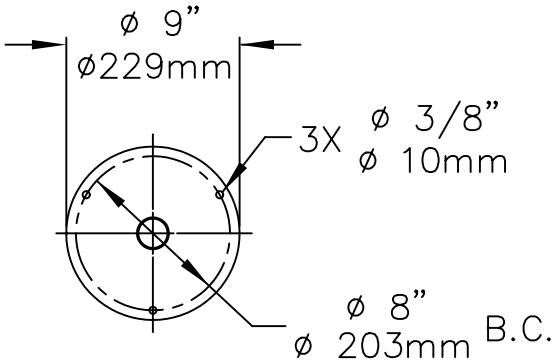

MOUNTING DETAIL

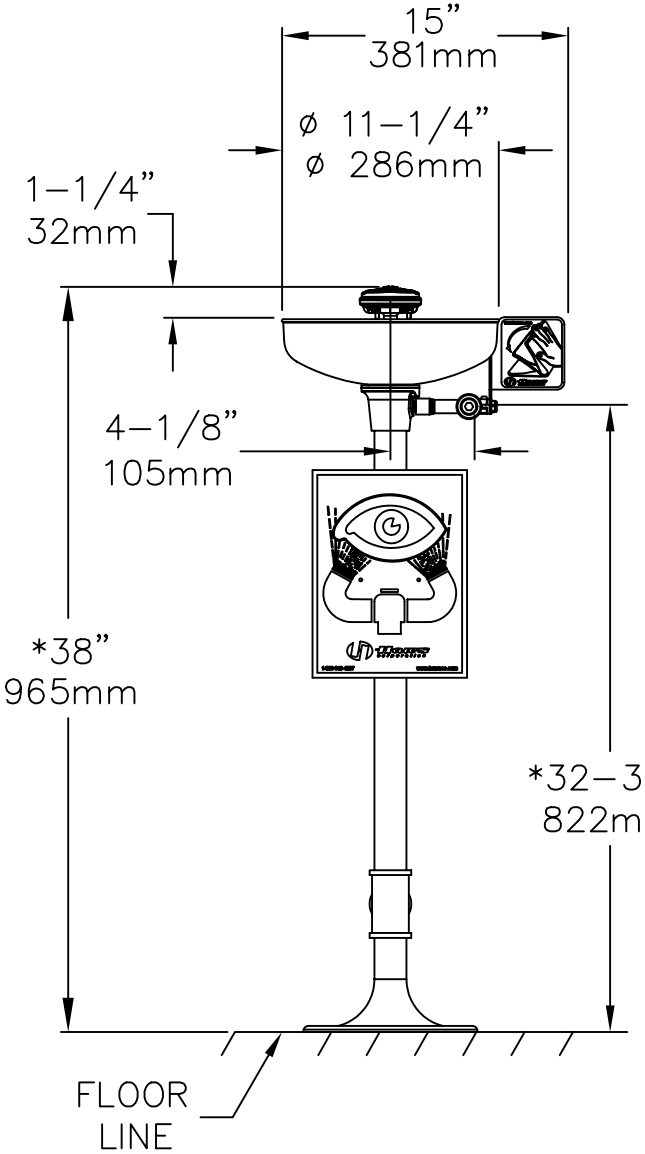

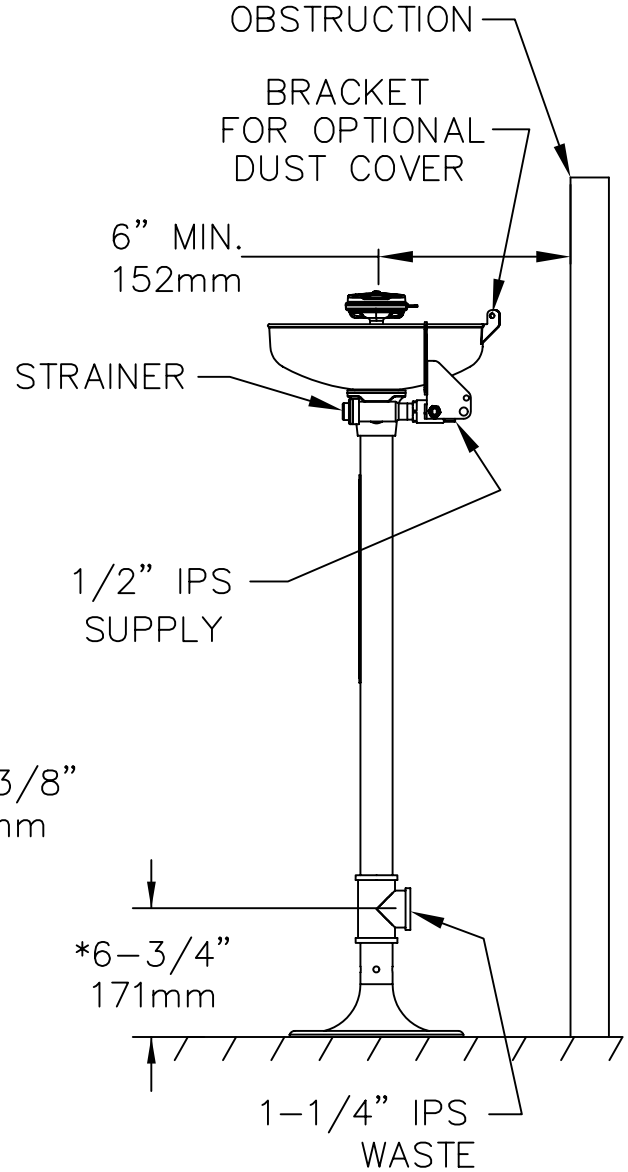

DWG. NO. 09398A00

NOTES:

1. TO COMPLY WITH ANSI Z358.1-2004 FOR EMERGENCY EYEWASH AND EYE/FACE WASH:
   - UNIT SHALL BE INSTALLED IN ACCORDANCE WITH MANUFACTURER'S INSTRUCTIONS AND ACCEPTABLE PLUMBING PRACTICES.
   - EYEWASH OR EYE/FACE WASH SHALL BE POSITIONED WITH NOZZLES NOT LESS THAN 83.8 CM (33IN.) AND NO GREATER THAN 114.3 CM (45 IN.) FROM SURFACE ON WHICH USER STANDS AND 15.3 CM (6 IN.) MINIMUM FROM WALL OR NEAREST OBSTRUCTION.
2. *THESE DIMENSIONS MAY VARY ± 1/2" [12.7mm]

Haws corporation
INFO FAX : 1-888-FAX-HAWS (1-888-329-4297)
1455 Kleppe Ln, Sparks NV, 89431
Phone: 775-359-4712 Fax: 775-359-7424
Haws Ag Bachweg 3 CH-3401 Burgdorf Switzerland
Haws Mfg Pte Ltd 74 Sungei Kadut Loop Singapore 729531
e-mail: Haws@hawsco.com website: www.hawsco.com

ECR NO.	REVISED PER	BY:	MODEL(S):	PART NUMBER:
.	ECN: 4161	IR	7261/7271/7261CRP/7271CRP	0002080043.D
DRAWN:	DATE:	CHK'D.:		DRAWING NUMBER: / REV.
c	04/92		INFO FAX DOC #: 27261, 27271	09398A00 / 14
APPROVED:	DATE:		SCALE: 1:5 / DRAWING TYPE: INSTALLATION/FAXBACK	SIZE: A / SHT. 1 OF 1

©2006 Haws Corporation - All Rights Reserved HAWS® and other trademarks used in these materials are the exclusive property of Haws Corporation.