THIS DOCUMENT IS TRUE AND CORRECT AT TIME OF PUBLICATION. CONTINUED PRODUCT IMPROVEMENTS MAKE SPECIFICATIONS AND MEASUREMENTS SUBJECT TO CHANGE WITHOUT NOTICE.

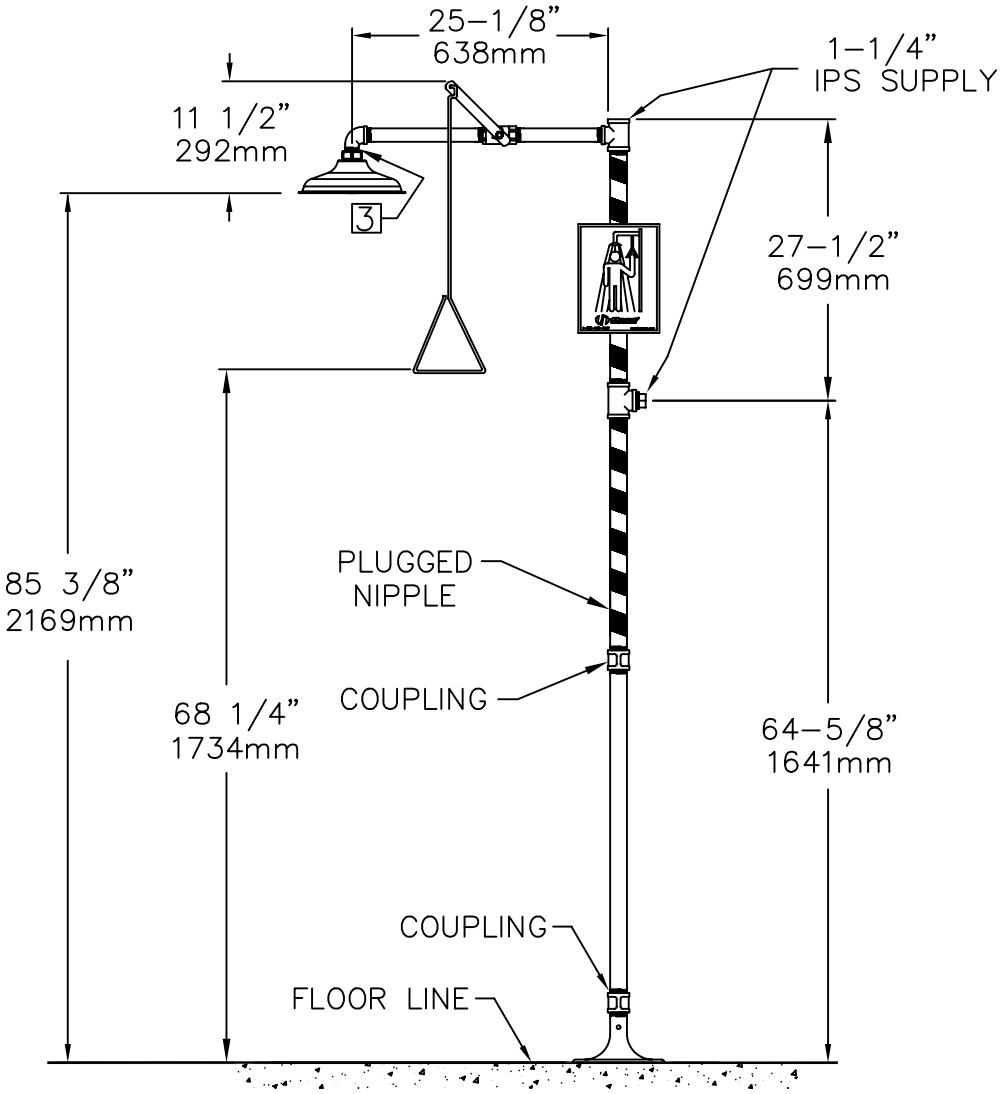

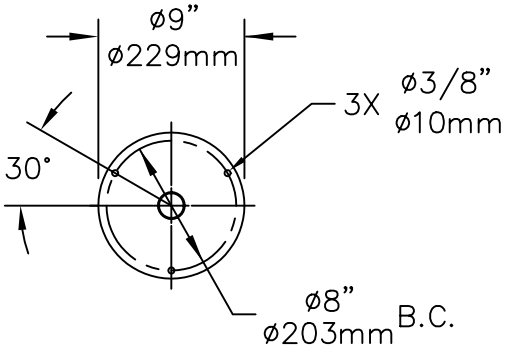

MOUNTING DETAIL

NOTES:

1. DIMENSIONS MAY VARY BY ± 1/2 INCH [13mm].

2. TO COMPLY WITH ANSI Z358.1-2004 FOR EMERGENCY SHOWER EQUIPMENT:
   - UNIT SHALL BE INSTALLED IN ACCORDANCE WITH MANUFACTURER'S INSTRUCTIONS AND ACCEPTABLE PLUMBING PRACTICES.
   - SHOWER SHALL BE POSITIONED SO THAT SHOWER HEAD IS NOT LESS THAN 208.3 CM (82 IN.) NOR MORE THAN 243.8 CM (96 IN.) FROM SURFACE ON WHICH USER STANDS.
   - SHOWER SPRAY PATTERN SHALL HAVE A MINIMUM DIAMETER OF 50.8 CM (20 IN.) AT 152.4 CM (60 IN.) ABOVE SURFACE ON WHICH USER STANDS, AND CENTER OF SPRAY PATTERN SHALL BE LOCATED AT LEAST 40.6 CM (16 IN.) FROM ANY OBSTRUCTION.

3. DO NOT USE REGULAR PIPE SEALANT. IF NECESSARY USE DOW CORNING 832 SEALANT PLACING 5 SMALL BEADS ON THE MALE THREADS, JUST ABOVE THE FIRST THREAD.

Haws corporation
1455 KLEPPE LANE
SPARKS, NEVADA 89431
(775) 359-4712 FAX (775) 359-7424
E-MAIL: HAWS@HAWSCO.COM
WEBSITE: WWW.HAWSCO.COM

ECN NO.	REVISED PER	BY:	MODEL(S):	PART NUMBER:
.	ECN: 4267	IR	8100 DRENCH SHOWER	0002080105.D
DRAWN: CJL	DATE: 08/91	CHK'D.:	INFO FAX DOC #: 28100	DRAWING NUMBER: 09458A00 — REV. 10
APPROVED:	DATE:		SCALE: 1:16 — DRAWING TYPE: INSTALLATION/FAXBACK	SIZE: A — SHEET 1 OF 1

DWG. NO. 09458A00

©2009 Haws Corporation - All Rights Reserved HAWS® and other trademarks used in these materials are the exclusive property of Haws Corporation.